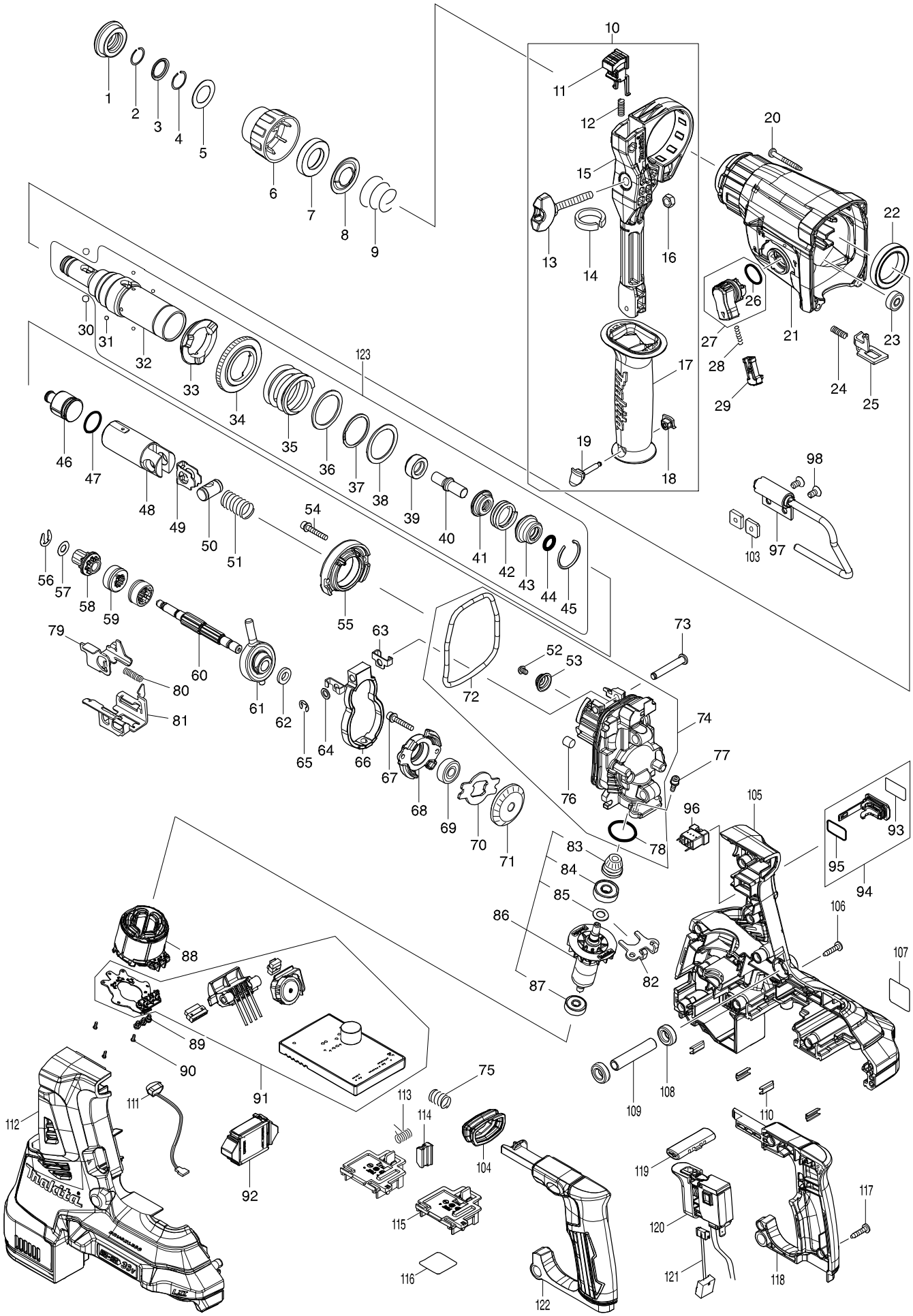# 모델번호 DHR282 28MM CRDLS COMBINATION HAMMER